DATA SWITCH

prepared by:

Gyro A. Madrona

Electronics Engineer

GRADING SYSTEM

FINAL GRADE

30%

PRELIM

30%

MIDTERM

40%

ENDTERM

100%

LABORATORY

PENALTY

0

ABSENT

3

45-min LATE

7 max

15-min LATE

TOPIC OUTLINE

Data Switch

- Footprint
- Schematic
- PCB
- Parts List

DATA SWITCH

FOOTPRINT

Component	Footprint
Light Emitting Diode	LED_red
Resistor 220R,1/4W	RES**1300**-700X250
Slide Switch SPDT	HDR1X**3**
Vcc	HDR1X**2**
Output	TEST_PT_THT
Capacitor 100uF	CAPPR**500**-1250X2500

SCHEMATIC DIAGRAM

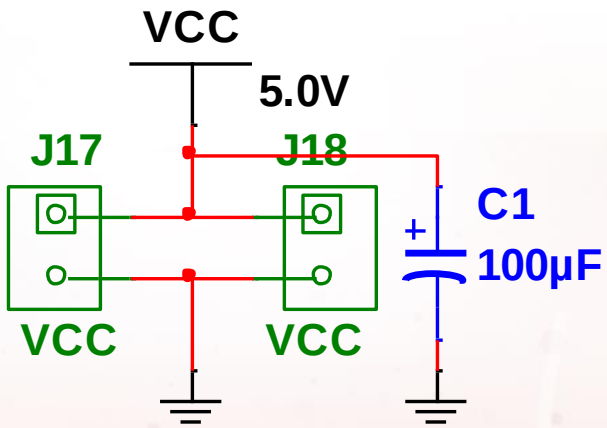

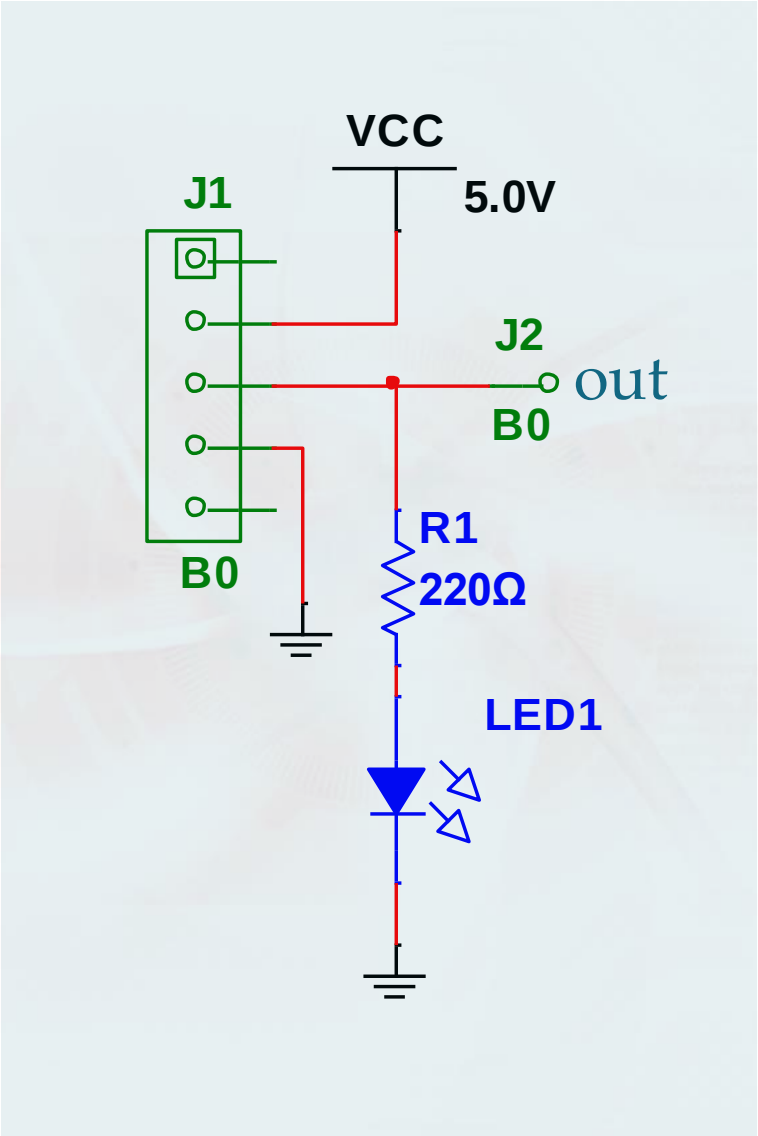

x8

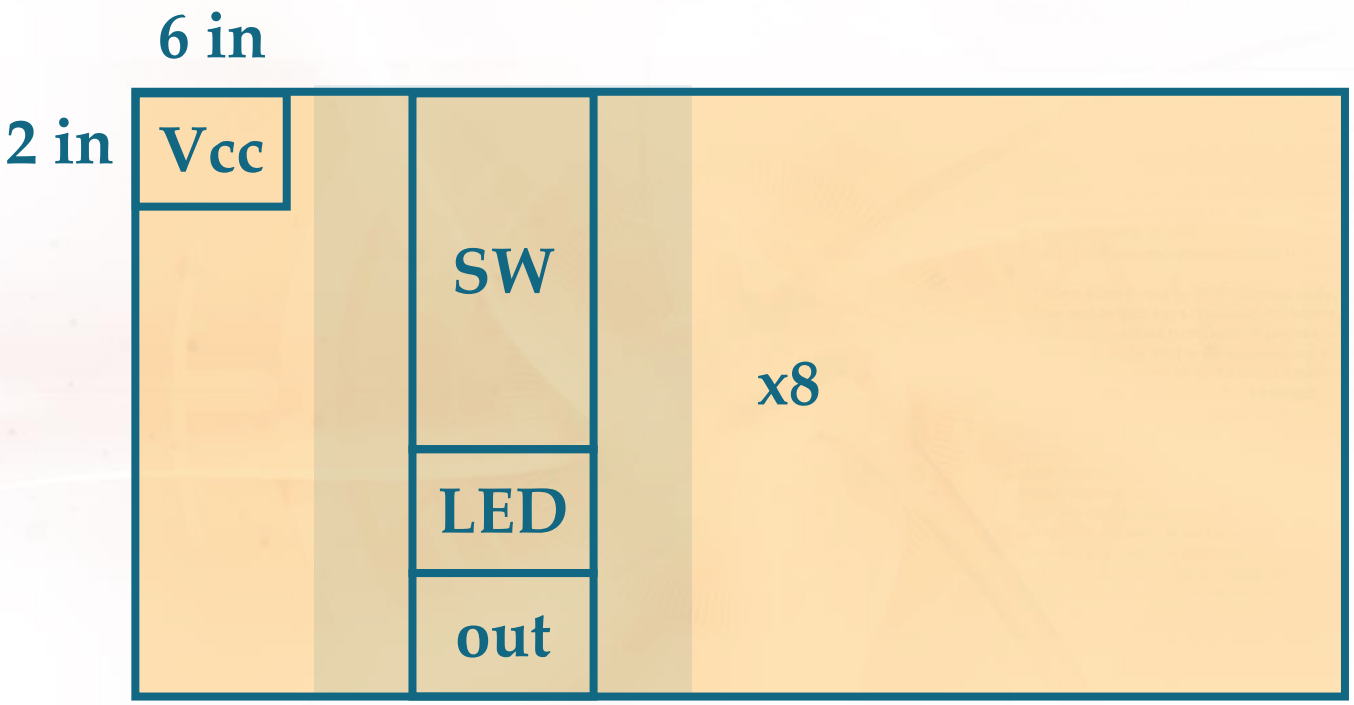

NO Copying of PCB Design!

PARTS LIST

Quantity	Description
1pc	Presensitized PCB 6″ x 4″
8pcs	SPDT Slide Switch (Small)
8pcs	LED 3V (small)
8pcs	Resistor 220R, 1/4W
8pcs	Terminal Strip
1pc	Electrolytic Capacitor 100uF/16V
1m	Stranded Wire Red #22AWG
1m	Stranded Wire Black #22AWG
4pcs	Bolts and Nuts + Washer 1″ length, 1/8″ diameter
4pcs	Spacer

LABORATORY